South Jordan City Sign Post, Sign Hardware Standard Drawing

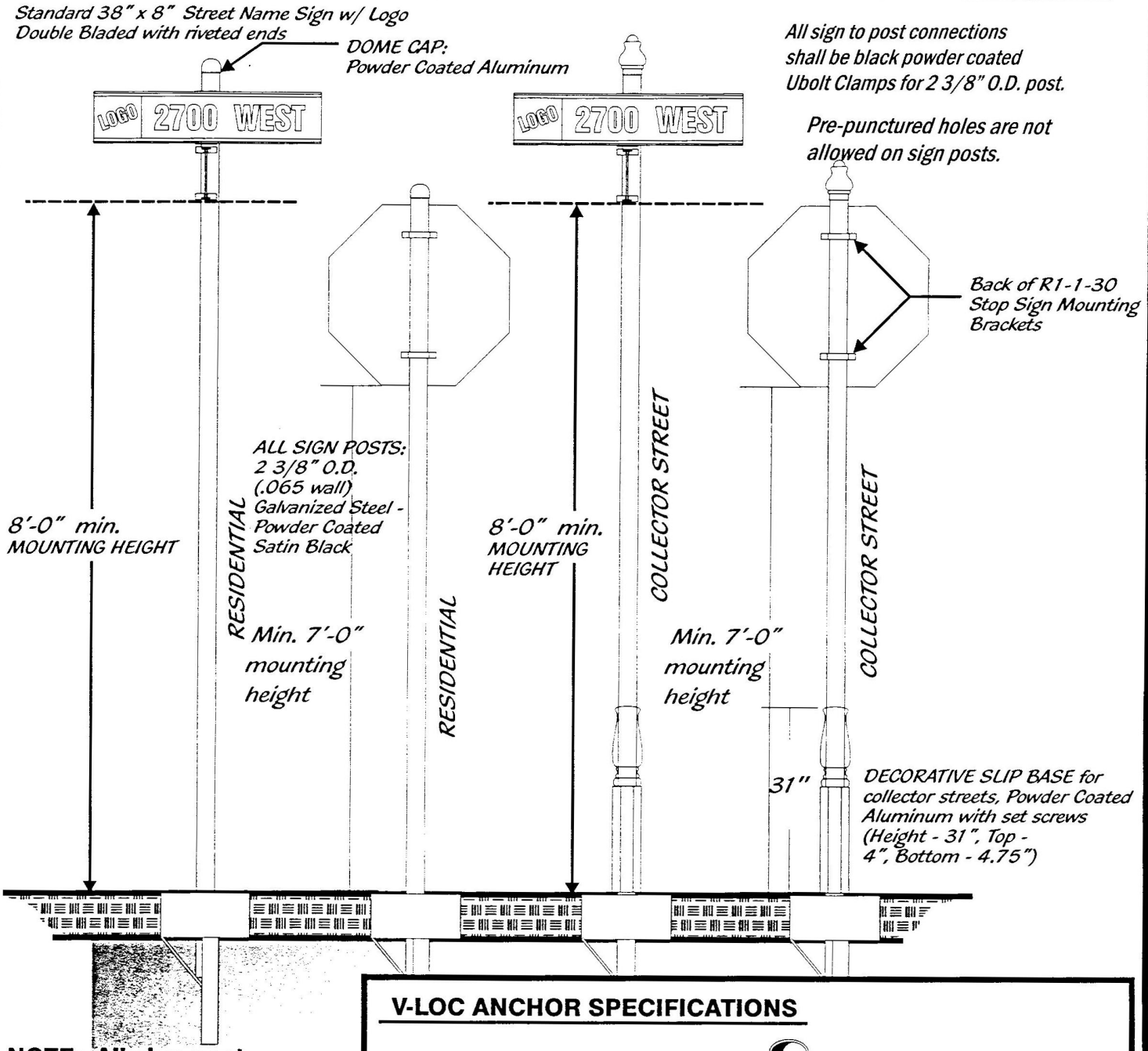

NOTE: All sign post material shall meet the following: Post material ASTM-A653, G90, HSLAS, Type B, 55,000 min Y.S. and 70,000 T. S. , approved by F.H.W.A. and ASHTO under current NCHRP Report #350.
Post, cap and decorative base to be powder coated satin black.

V-LOC ANCHOR SPECIFICATIONS

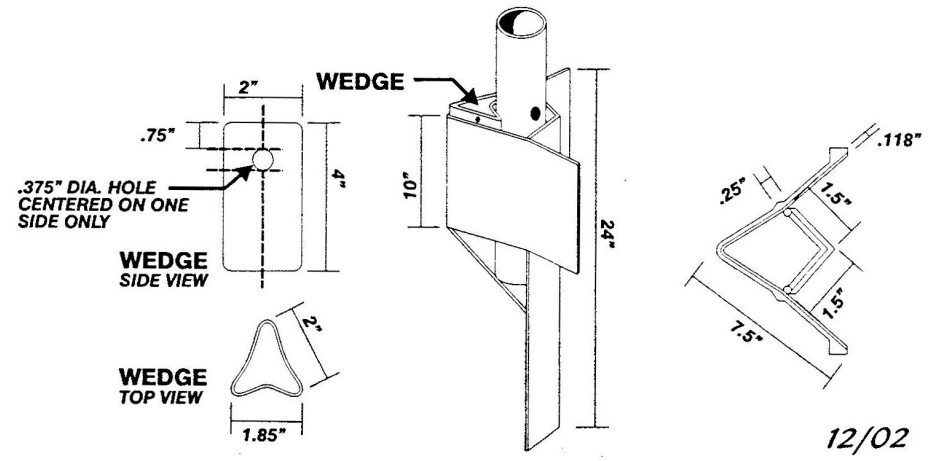

12/02